Product Technical Specification

Product code	CG.M3.CS
Commercial name	PAPER PACKAGING - ICE CREAM PAPER CUPS - TYPE M3
Made by	MEDAC S.r.l. Via R. Wenner, 52 84131 Salerno
Capacity	To the rim: almost 285 ml To line measure(line): 0 ml To groove: almost 230 ml
Product unit weight	0.00810 KG
Related item	PAPER DISC | PLASTIC LIDS |PAPER CUPS CARRIER |PAPER LID |PAPER FILM
Size*	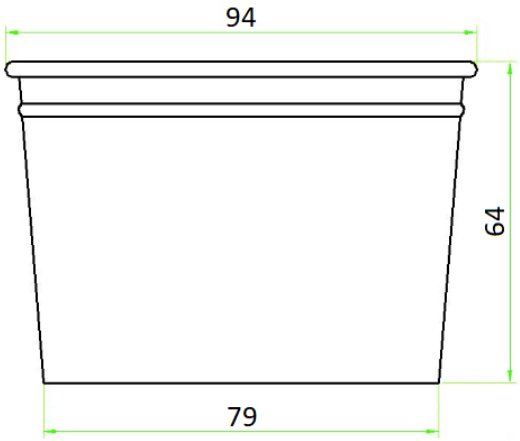 * units in mm
Use destination	Food holder
Terms of use	Suitable to contain frozen, cooled and room temperature food products. Not suitable to use in traditional, gas/electric, oven and with liquids. When used to contain frozen products, it absorbs humidity at room temperature. In the case of multiple uses (e.g. freezing, use and re-freezing) the natural action of moisture causes a weakening of the cup structure. Medac guarantees the product limited to the above mentioned characteristics; Medac is not responsible for any use of the product which is different from the above mentioned ones. Medac is not responsible for any kind of damage deriving from a non-conventional use of the product. Medac reserves the right to improve upon the product without any warning. For different uses, please check the samples provided by Medac.
Product packaging	Primary packaging: BAG of 160 pz Secondary packaging: BOX of 960 pz (6 bags) Tertiary packaging: EPAL WOODEN PALLET of 16 boxes (15.360 pz) wrapped with polyethylene film for external protection
Transport and storage information	Packing external size (L X W X H): 590x390x586 mm Packing Volume: 0,134 m3 Packing gross weight: 9,50692 kg Pallet size: 0,80 X 1,20 X 2,50 m Number of layers: 4 Box for layers: 4
Product raw material	Multilayer paper of virgin cellulose coated on the inner side with polyethylene. No use of recycled material.
Packaging raw material	Primary packaging: low density polyethylene bag Secondary packaging: Box made from recycled paper
Storage conditions	Keep in a dry, covered and aired place, according to hygroscopic productions, at most 2 overlaid pallets
Food contact declaration	This product meet the requirements of materials and articles intended to come into contact with food: Regulation EC 10/2011 and amendments (latest 2020/1245 of 2 September 2020); Regulation EC 2023/2006; Regulation EC 1895/2005; European Parliament and Council Directive 94/62/EC (amendments to Directive 2004/12/EC and 2005/20/EC and Regulation 219/2009); Regulation EC 1935/2004 Article 3, Article 11, paragraph 5, Article 15 and Article 17.
Traceability declaration	This product meet the requirements of product traceability according with art. 17 of Regulation (CE) N. 1935/2004. Production lot is reported on the label of every single box
Compliance declaration of packaging and packaging waste	Waste, hazardous waste, packaging and packaging waste are managed in compliance with Directives 91/156/EEC, 91/689/EEC respectively and 94/62/EEC (updated by Directive 2004/12/EC and 2005/20/EC and Regulation 219/2009)
Environmental labeling	For disposal information frame the qr code.